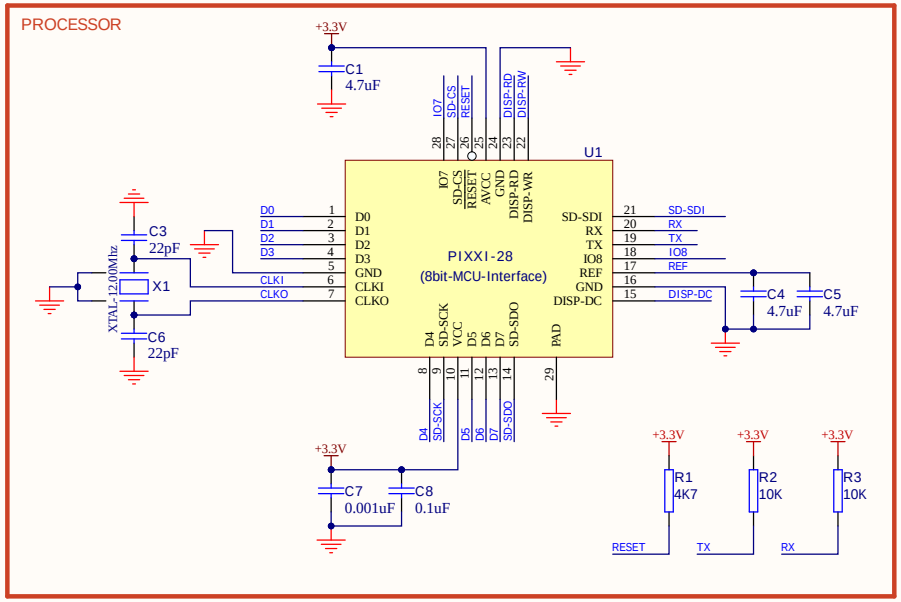

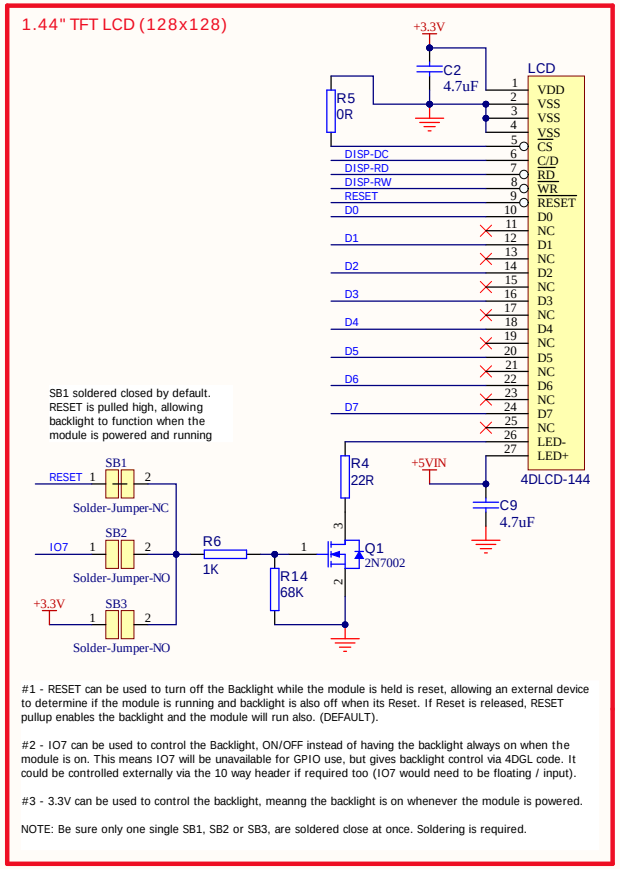

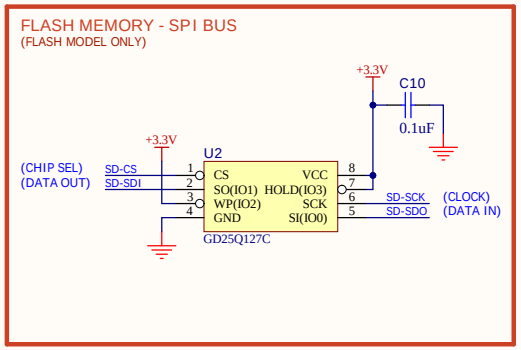

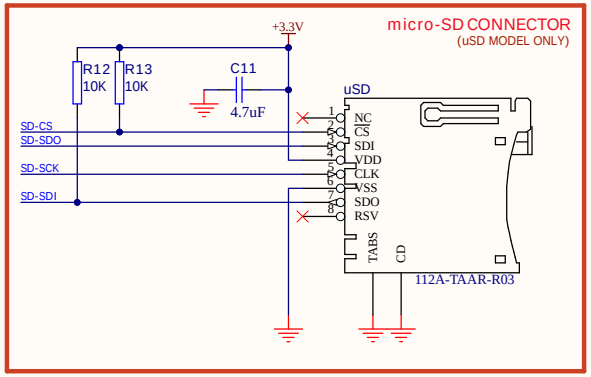

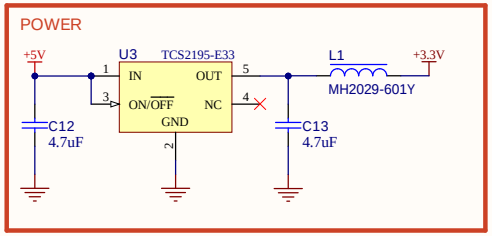

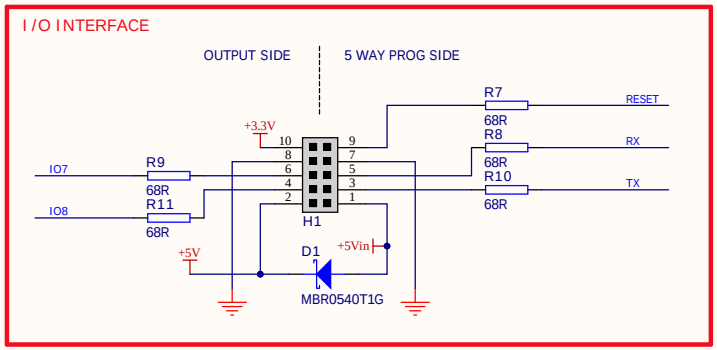

http://www.4dsystems.com.au

Title: uLCD-144P2 - 1.44" Pixxi-28

Revision: 1.1

Date: 27/11/2024

Time: 11:34:03 am

4D SYSTEMS
MAKING HUMAN INTELLIGENCE SMARTER

File: uLCD-144P2-REV1.1.SchDoc