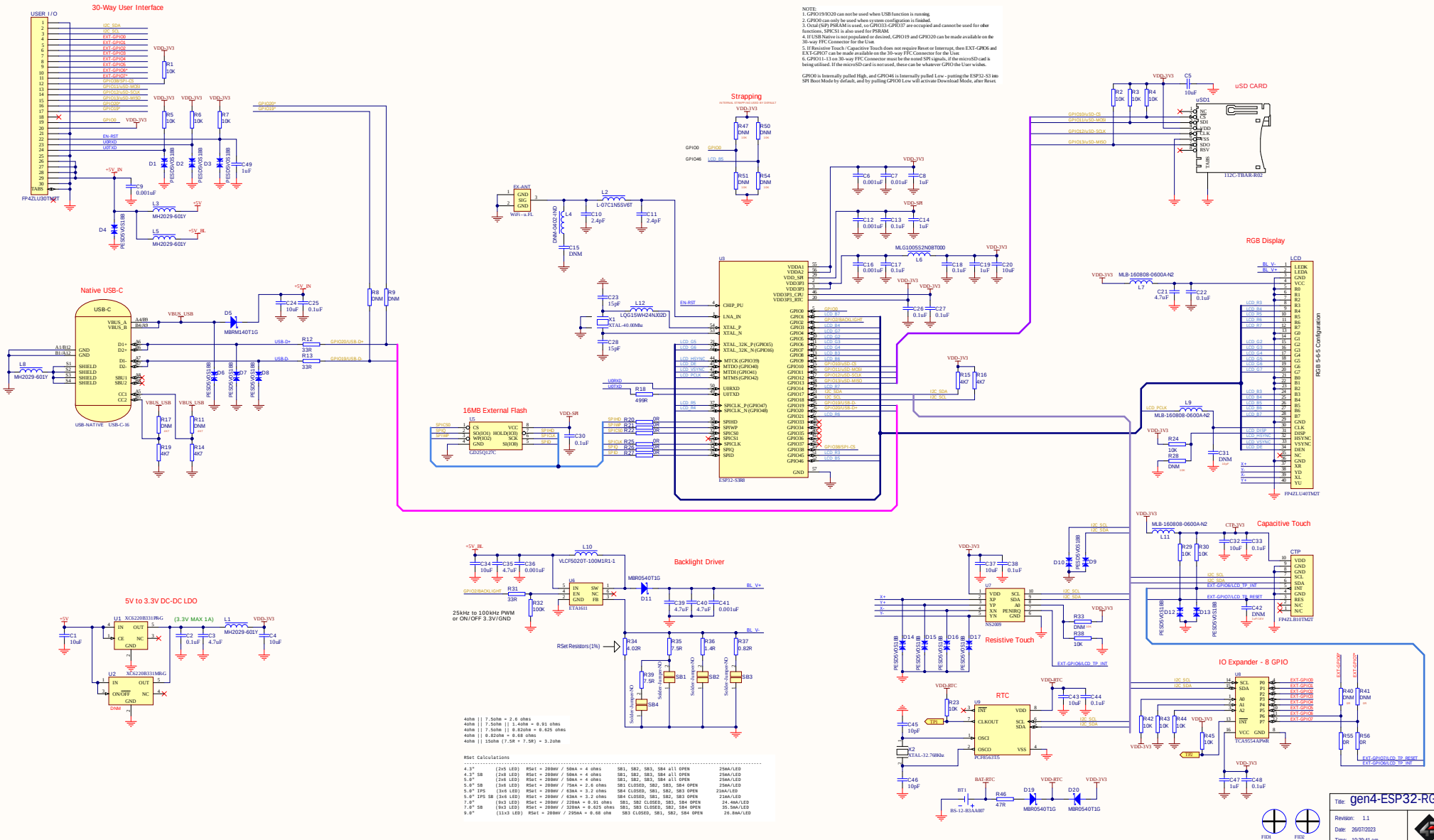
30-Way User Interface
USER I/O
FP4ZLU30TMDT
Native USB-C
USB-C
USB-NATIVE USB-C-16
16MB External Flash
U5
GD25Q128C
5V to 3.3V DC-DC LDO
U1 XC6220B331MRG
U2 XC6220B331MRG
(3.3V MAX 1A)
Strapping
U3
ESP32-S3R8
Backlight Driver
25kHz to 100kHz PWM
or ON/OFF 3.3V/GND
RSet Resistors (1%)
uSD CARD
uSD1
112C-TBAR-R02
RGB Display
LCD
FP4ZLU40TMDT
RGB 5-6-5 Configuration
Capacitive Touch
CTP
FP4ZLB10TMDT
Resistive Touch
U7
NS2009
RTC
U9
PCF85631S
IO Expander - 8 GPIO
U8
TCA9554APWR
NOTE:
1. GPIO19/IO20 can not be used when USB function is running.
2. GPIO0 can only be used when system configuration is finished.
3. Octal (SiP) PSRAM is used, so GPIO33~GPIO37 are occupied and cannot be used for other functions, SPICS1 is also used for PSRAM.
4. If USB Native is not populated or desired, GPIO19 and GPIO20 can be made available on the 30-way FFC Connector for the User.
5. If Resistive Touch / Capacitive Touch does not require Reset or Interrupt, then EXT-GPIO6 and EXT-GPIO7 can be made available on the 30-way FFC Connector for the User.
6. GPIO11-13 on 30-way FFC Connector must be the noted SPI signals, if the microSD card is being utilised. If the microSD card is not used, these can be whatever GPIO the User wishes.
GPIO0 is Internally pulled High, and GPIO46 is Internally pulled Low - putting the ESP32-S3 into SPI Boot Mode by default, and by pulling GPIO0 Low will activate Download Mode, after Reset.
4ohm || 7.5ohm = 2.6 ohms
4ohm || 7.5ohm || 3.4ohm = 0.91 ohms
4ohm || 7.5ohm || 0.82ohm = 0.625 ohms
4ohm || 0.82ohm = 0.68 ohms
4ohm || 15ohm (7.5R + 7.5R) = 3.2ohm
RSet Calculations
4.3" (2x5 LED) RSet = 200mV / 50mA = 4 ohms SB1, SB2, SB3, SB4 all OPEN 25mA/LED
4.3" SB (2x8 LED) RSet = 200mV / 50mA = 4 ohms SB1, SB2, SB3, SB4 all OPEN 25mA/LED
5.0" (2x6 LED) RSet = 200mV / 50mA = 4 ohms SB1, SB2, SB3, SB4 all OPEN 25mA/LED
5.0" SB (3x6 LED) RSet = 200mV / 75mA = 2.6 ohms SB1 CLOSED, SB2, SB3, SB4 OPEN 25mA/LED
5.0" IPS (3x6 LED) RSet = 200mV / 63mA = 3.2 ohms SB4 CLOSED, SB1, SB2, SB3 OPEN 21mA/LED
5.0" IPS SB (3x8 LED) RSet = 200mV / 63mA = 3.2 ohms SB4 CLOSED, SB1, SB2, SB3 OPEN 21mA/LED
7.0" (9x3 LED) RSet = 200mV / 220mA = 0.91 ohms SB1, SB2 CLOSED, SB3, SB4 OPEN 24.4mA/LED
7.0" SB (9x3 LED) RSet = 200mV / 320mA = 0.625 ohms SB1, SB3 CLOSED, SB2, SB4 OPEN 35.5mA/LED
9.0" (11x3 LED) RSet = 200mV / 295mA = 0.68 ohm SB3 CLOSED, SB1, SB2, SB4 OPEN 26.8mA/LED
http://www.4dsystems.com.au
Title: gen4-ESP32-RGB
Revision: 1.1
Date: 26/07/2023
Time: 10:39:41 am
4D SYSTEMS
File: gen4-ESP32-RGB-REV1.1.SchDoc