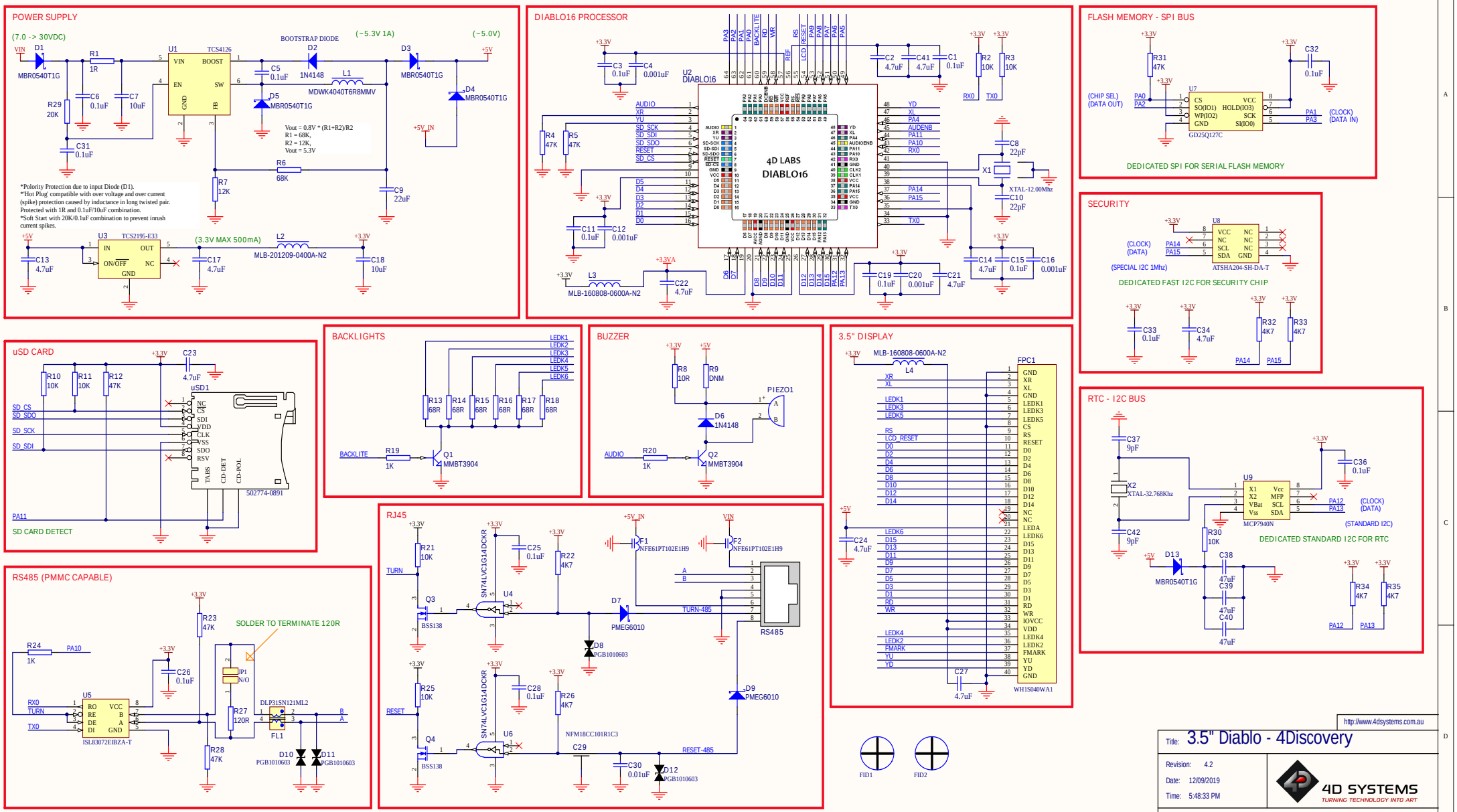
POWER SUPPLY
(7.0 -> 30VDC)
VIN
D1
MBR0540T1G
R1
1R
R29
20K
C6
0.1uF
C7
10uF
C31
0.1uF
U1
TCS4126
VIN
BOOST
EN
SW
GND
FB
BOOTSTRAP DIODE
D2
1N4148
(~5.3V 1A)
(~5.0V)
C5
0.1uF
L1
MDWK4040T6R8MMV
D3
MBR0540T1G
+5V
D4
MBR0540T1G
D5
MBR0540T1G
+5V_IN
Vout = 0.8V * (R1+R2)/R2
R1 = 68K,
R2 = 12K,
Vout = 5.3V
R6
68K
R7
12K
C9
22uF
*Polority Protection due to input Diode (D1).
*'Hot Plug' compatible with over voltage and over current (spike) protection caused by inductance in long twisted pair. Protected with 1R and 0.1uF/10uF combination.
*Soft Start with 20K/0.1uF combination to prevent inrush current spikes.
U3
TCS2195-E33
IN
OUT
ON/OFF
NC
GND
(3.3V MAX 500mA)
L2
MLB-201209-0400A-N2
+3.3V
C13
4.7uF
C17
4.7uF
C18
10uF
DIABLO16 PROCESSOR
U2
DIABLO16
4D LABS
DIABLO16
C3
0.1uF
C4
0.001uF
C2
4.7uF
C41
4.7uF
C1
0.1uF
R2
10K
R3
10K
RX0
TX0
R4
47K
R5
47K
AUDIO
XR
YU
SD_SCK
SD_SDI
SD_SDO
RESET
SD_CS
D5
D4
D3
D2
D1
D0
C8
22pF
X1
XTAL-12.00Mhz
C10
22pF
C11
0.1uF
C12
0.001uF
L3
MLB-160808-0600A-N2
+3.3VA
C22
4.7uF
C19
0.1uF
C20
0.001uF
C21
4.7uF
C14
4.7uF
C15
0.1uF
C16
0.001uF
FLASH MEMORY - SPI BUS
R31
47K
C32
0.1uF
(CHIP SEL)
(DATA OUT)
PA0
PA2
U7
CS
SO(IO1)
WP(IO2)
GND
VCC
HOLD(IO3)
SCK
SI(IO0)
GD25Q127C
PA1
PA3
(CLOCK)
(DATA IN)
DEDICATED SPI FOR SERIAL FLASH MEMORY
SECURITY
U8
VCC
NC
SCL
SDA
GND
(CLOCK)
(DATA)
PA14
PA15
(SPECIAL I2C 1Mhz)
ATSHA204-SH-DA-T
DEDICATED FAST I2C FOR SECURITY CHIP
C33
0.1uF
C34
4.7uF
R32
4K7
R33
4K7
uSD CARD
R10
10K
R11
10K
R12
47K
C23
4.7uF
uSD1
SD_CS
SD_SDO
SD_SCK
SD_SDI
NC
CS
SDI
VDD
CLK
VSS
SDO
RSV
TABS
CD-DET
CD-POL
502774-0891
PA11
SD CARD DETECT
BACKLIGHTS
LEDK1
LEDK2
LEDK3
LEDK4
LEDK5
LEDK6
R13
68R
R14
68R
R15
68R
R16
68R
R17
68R
R18
68R
BACKLITE
R19
1K
Q1
MMBT3904
BUZZER
R8
10R
R9
DNM
PIEZO1
D6
1N4148
AUDIO
R20
1K
Q2
MMBT3904
3.5" DISPLAY
MLB-160808-0600A-N2
L4
FPC1
WH1S040WA1
C24
4.7uF
C27
4.7uF
RTC - I2C BUS
C37
9pF
X2
XTAL-32.768Khz
C42
9pF
U9
X1
X2
VBat
Vss
Vcc
MFP
SCL
SDA
MCP7940N
C36
0.1uF
PA12
PA13
(CLOCK)
(DATA)
(STANDARD I2C)
R30
10K
D13
MBR0540T1G
C38
47uF
C39
47uF
C40
47uF
R34
4K7
R35
4K7
DEDICATED STANDARD I2C FOR RTC
RS485 (PMMC CAPABLE)
R23
47K
SOLDER TO TERMINATE 120R
R24
1K
PA10
C26
0.1uF
U5
ISL83072EIBZA-T
RO
RE
DE
DI
VCC
B
A
GND
RX0
TURN
TX0
JP1
N/O
R27
120R
DLP31SN121ML2
FL1
R28
47K
D10
PGB1010603
D11
PGB1010603
RJ45
R21
10K
TURN
Q3
BSS138
SN74LVC1G14DCKR
U4
C25
0.1uF
R22
4K7
F1
NFE61PT102E1H9
F2
NFE61PT102E1H9
D7
PMEG6010
TURN-485
RS485
D8
PGB1010603
R25
10K
RESET
Q4
BSS138
U6
C28
0.1uF
R26
4K7
NFM18CC101R1C3
C29
D9
PMEG6010
RESET-485
C30
0.01uF
D12
PGB1010603
FID1
FID2
http://www.4dsystems.com.au
Title: 3.5" Diablo - 4Discovery
Revision: 4.2
Date: 12/09/2019
Time: 5:48:33 PM
4D SYSTEMS
TURNING TECHNOLOGY INTO ART
File: 4Discovery-REV4.2.SchDoc